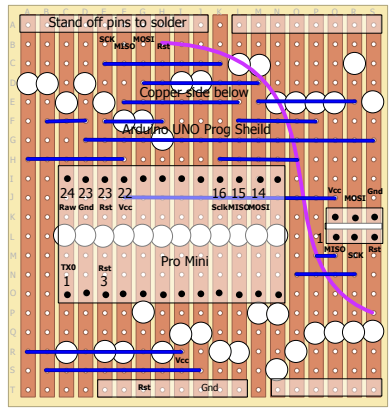
Stand off pins to solder
SCK
MISO
MOSI
Rst
Copper side below
Arduino UNO Prog Sheild
24 23 23 22
Raw Gnd Rst Vcc
16 15 14
Sck MISO MOSI
Vcc
MOSI
Gnd
1
MISO
SCK
Rst
Pro Mini
TX0
1
Rst
3
Vcc
Rst
Gnd